AP66, AP66D, and AP66E

Hardware Installation Guide

Overview

The AP66, AP66D, & AP66E contain four IEEE 802.11be radios that deliver 2x2 MIMO with two spatial streams when operating in multi-user (MU) or single-user (SU) mode. The AP66, AP66D, & AP66E can operate simultaneously in the 6GHz band, 5GHz band, and 2.4GHz band along with a dedicated tri-band scan radio.

Juniper Networks (C) Copyright 2025-2026. All Rights Reserved

I/O ports

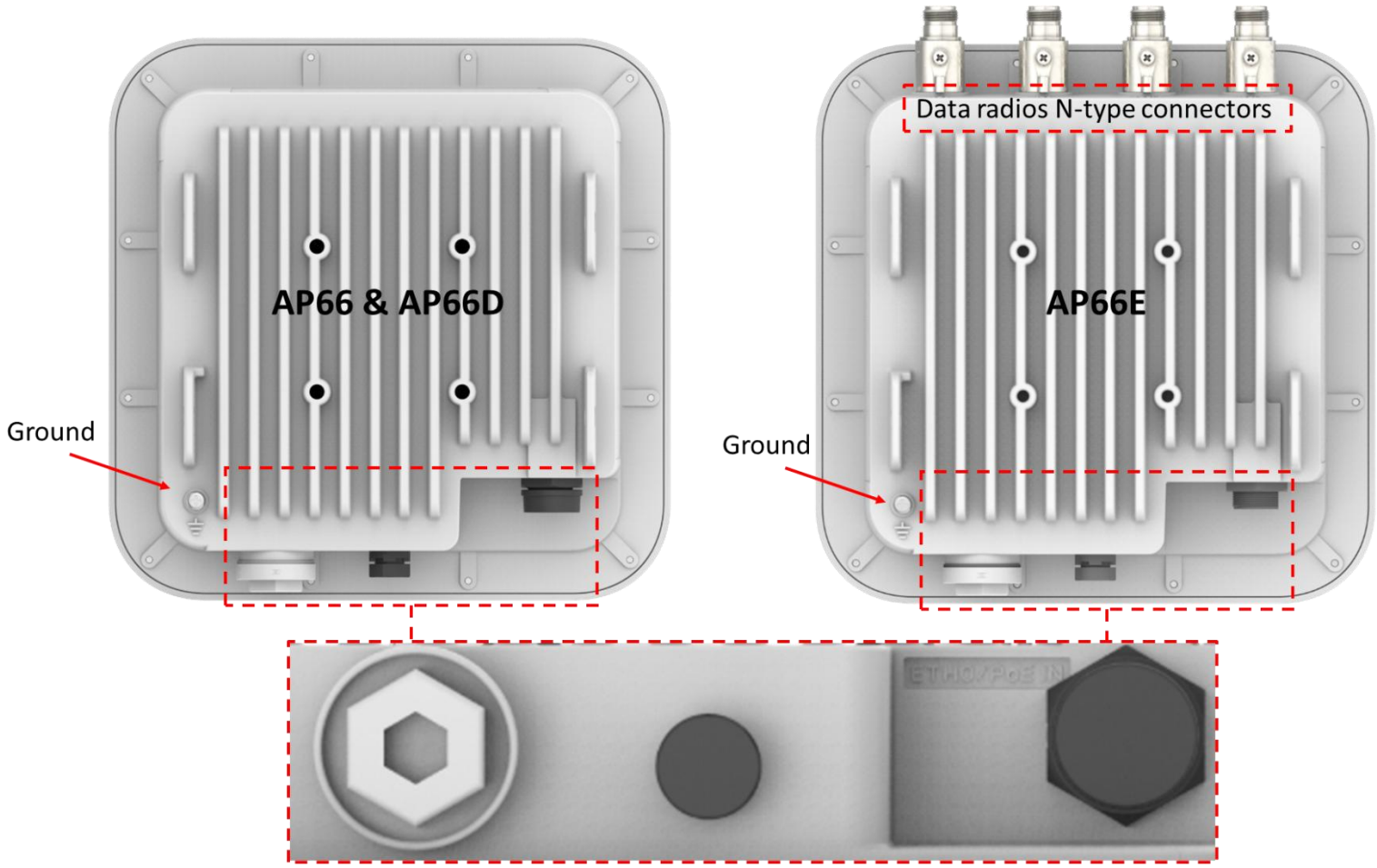

ETH0/PoE IN	100/1000/2500/5000/10000BASE-T RJ45 interface that supports 802.3at PoE PD

Ground should be connected to Earth ground using wire that is 8AWG or larger diameter.

Juniper Networks (C) Copyright 2025-2026. All Rights Reserved

AP66, AP66D, & AP66E Mounting

Flush Mount Bracket

APOUTBR-FM2 Mounting kit

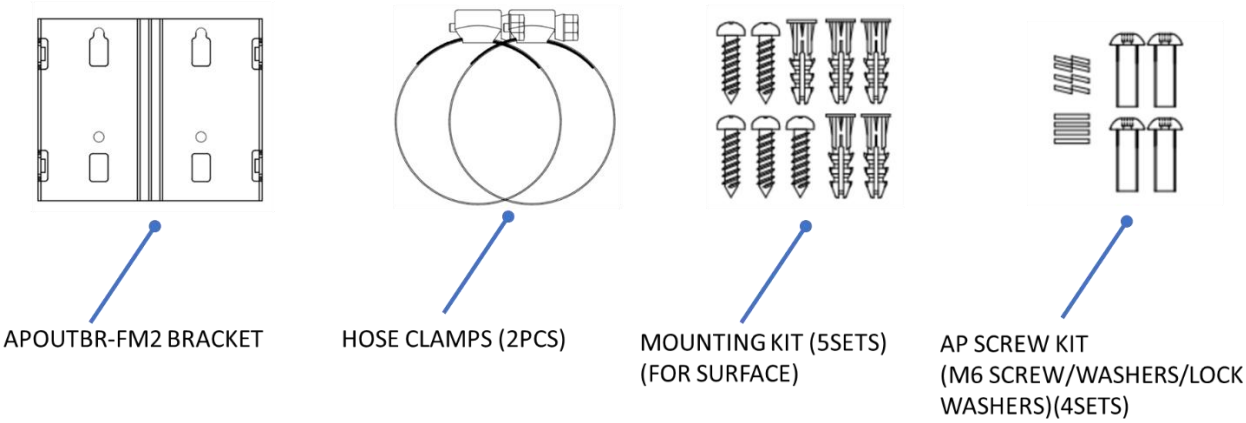

Articulating Mount Bracket

APOUTBR-ART2 Mounting kit

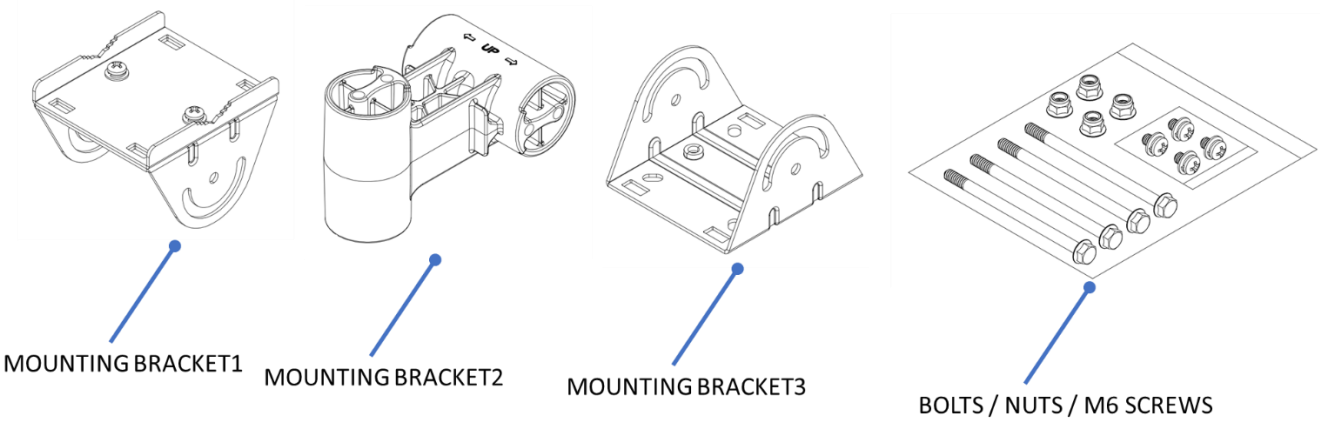

Juniper Networks (C) Copyright 2025-2026. All Rights Reserved

Flush Mount to Surface

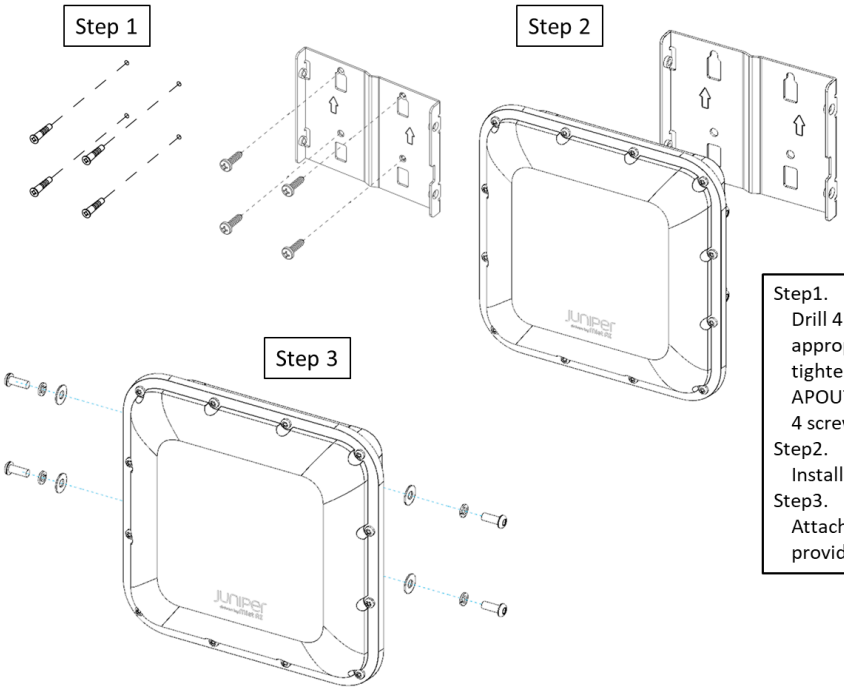

Step1.
Drill 4 holes into the surface. Insert anchors if appropriate. Insert the 2 upper screws and tighten halfway into the surface. Install the APOUTBR-FM2 onto the surface and tighten the 4 screws to the surface.
Step2.
Install the AP onto the APOUTBR-FM2.
Step3.
Attach the AP to the APOUTBR-FM2 using the provided screws and washers.

Flush Mount to Pole

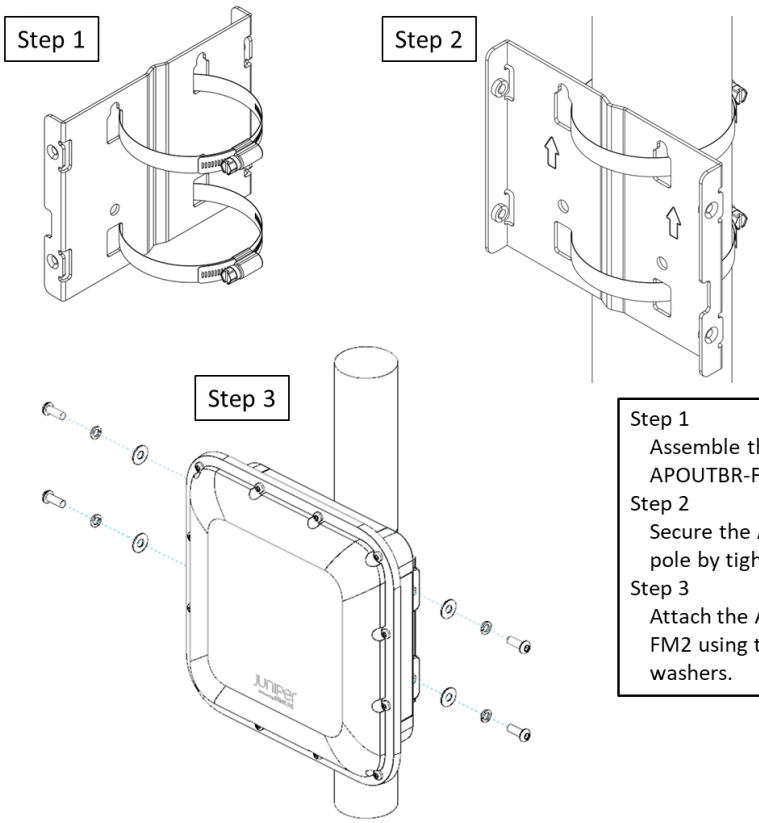

Step 1
Assemble the hose clamp onto the APOUTBR-FM2.
Step 2
Secure the APOUTBR-FM2 to the pole by tightening the hose clamp.
Step 3
Attach the AP to the APOUTBR-FM2 using the provided screws and washers.

Juniper Networks (C) Copyright 2025-2026. All Rights Reserved

Articulating Mount to Surface

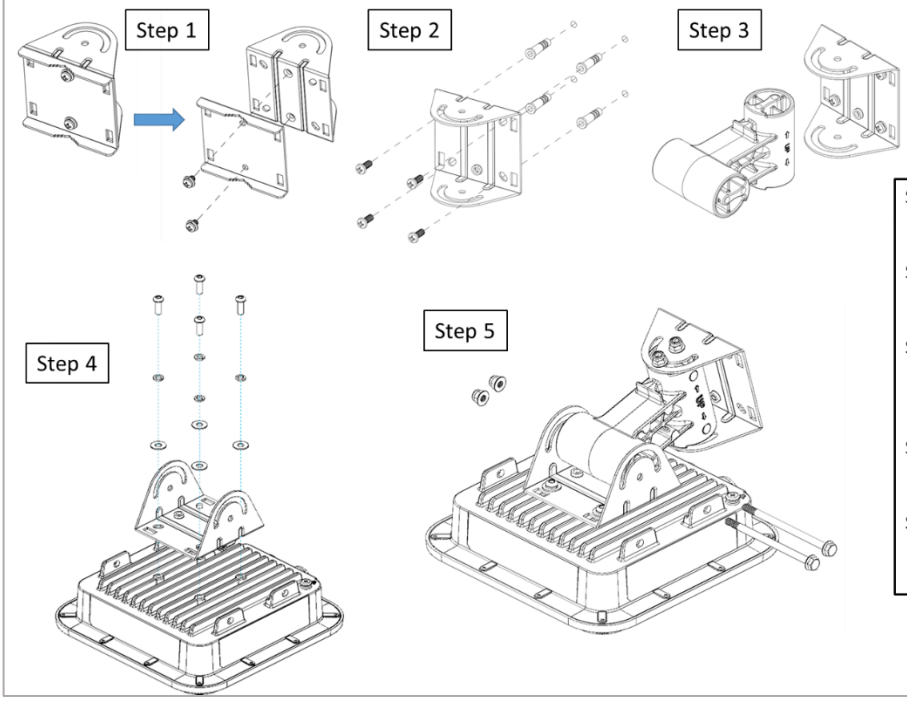

Step 1
Disassemble APOUTBR-ART2 Mounting Bracket1.
Step 2
Install APOUTBR-ART2 Mounting Bracket1 to the surface.
Step 3
Assemble APOUTBR-ART2 Mounting Bracket2 to Bracket1. Attach the side with "← UP →" to Bracket1.
Step 4
Install the APOUTBR-ART2 Mounting Bracket3 to the AP.
Step 5
Assemble the AP with Bracket3 to the Bracket2 using the long screws and nuts.

Articulating Mount to Pole

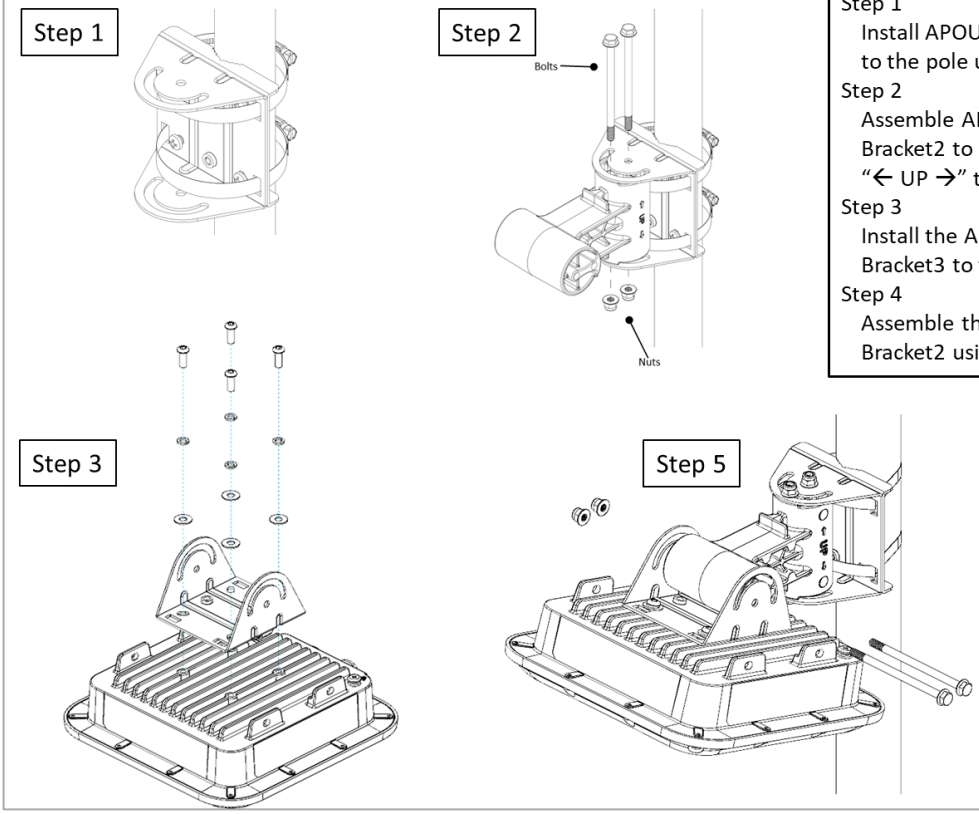

Step 1
Install APOUTBR-ART2 Mounting Bracket1 to the pole using the hose clamps.
Step 2
Assemble APOUTBR-ART2 Mounting Bracket2 to Bracket1. Attach the side with "← UP →" to Bracket1.
Step 3
Install the APOUTBR-ART2 Mounting Bracket3 to the AP.
Step 4
Assemble the AP with Bracket3 to the Bracket2 using the long screws and nuts.

Juniper Networks (C) Copyright 2025-2026. All Rights Reserved

AP66E antenna connection

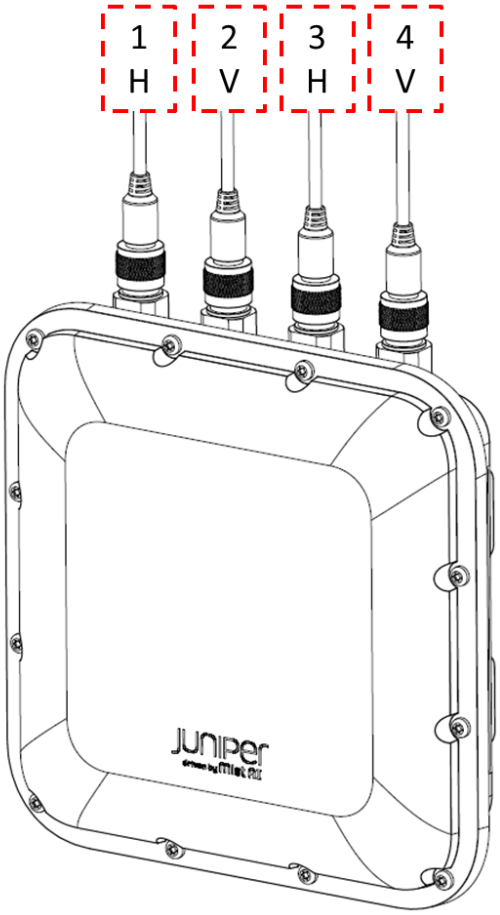

Juniper Networks (C) Copyright 2025-2026. All Rights Reserved

Connecting RJ45 Cable Gland

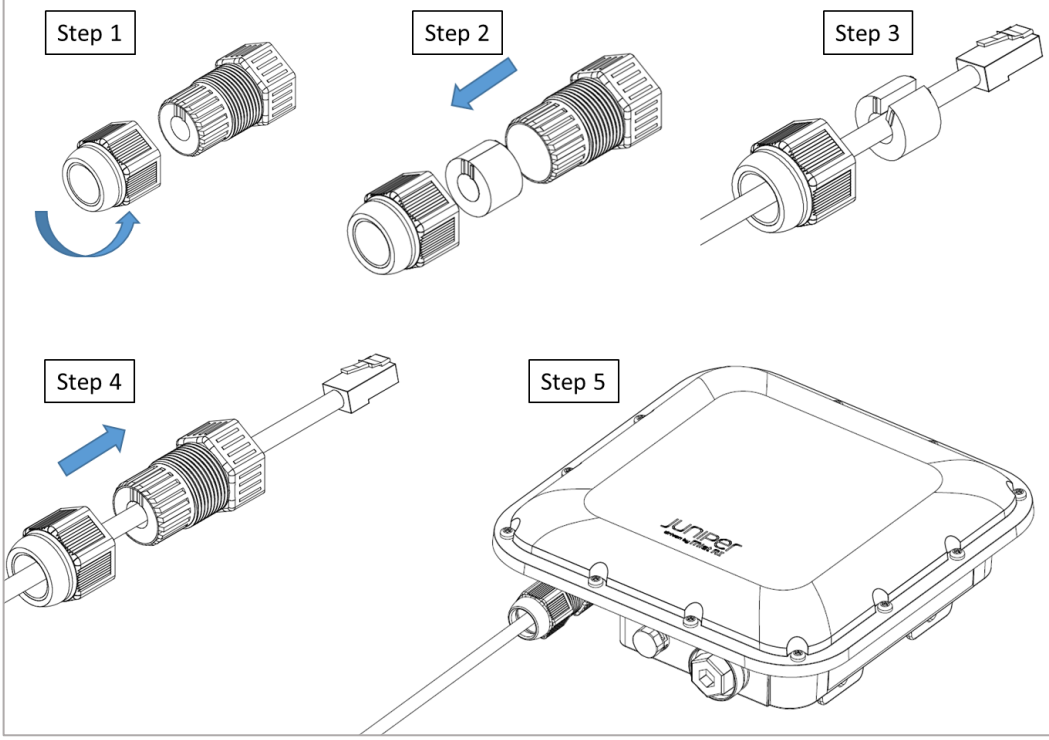

Step1.
Disassemble cable gland
Step2.
Remove the blue seal from the cable gland. Select the proper seal:
Blue seal diameter is 7mm - 9.5mm
Red seal diameter is 5.5mm - 7mm
Step3.
Open the seal, squeeze where you see the 2 lines, and insert the Ethernet cable thru the nut and seal
Step4.
Push Ethernet cable thru the gland. Push the seal into the gland and loosely tighten the nut
Step5.
Connect the RJ45, tighten the cable gland to the AP64 meeting a torque spec of 10-12kg-cm, and fully tighten the nut to the cable gland meeting a torque spec of 7-10kg-cm

Juniper Networks (C) Copyright 2025-2026. All Rights Reserved

Technical Specifications:

Feature	Description
Power options	802.3at PoE
Dimensions	AP66: 232mm x 232mm x 71mm (9.13in x 9.13in x 2.80in) AP66D: 232mm x 232mm x 88mm (9.13in x 9.13in x 3.46in) AP66E: 232mm x 232mm x 88mm (9.13in x 9.13in x 3.46in)
Weight	AP66: 2.0 kg (4.41 lbs) AP66D: 2.1 kg (4.63 lbs) AP66E: 2.1 kg (4.63 lbs)
Operating temperature	AP66, AP66D, & AP66E: -40° to 65° C without solar loading AP66, AP66D, & AP66E: -40° to 55° C with solar loading
Operating humidity	10% to 90% maximum relative humidity, non-condensing
Operating altitude	3,048m (10,000 ft)
Electromagnetic emissions	FCC Part 15 Class B
I/O	1 – 100/1000/2500/5000/10000BASE-T auto-sensing RJ-45 with PoE In
RF	2.4GHz - 2x2:2SS 802.11be MU-MIMO & SU-MIMO 5GHz - 2x2:2SS 802.11be MU-MIMO & SU-MIMO 6GHz - 2x2:2SS 802.11be MU-MIMO & SU-MIMO 2.4GHz/5GHz/6GHz scanning radio 2.4GHz BLE with Omni Antenna 802.15.4 : IoT radio with Omni Antenna GNSS: L1 & L5
Maximum PHY rate	Total maximum PHY rate – 9334 Mbps 6GHz – 5764 Mbps 5GHz – 2882 Mbps 2.4GHz – 688 Mbps
Indicators	Multi-color status LED
Safety standards	CSA 62368-1(Third Edition) CAN/CSA-C22.2 No. 62368-1-19+Upd 1 (Third Edition) ICES-003:2020 Issue 7, Class B (Canada)

Juniper Networks (C) Copyright 2025-2026. All Rights Reserved

Warranty Information

The AP66, AP66D, or AP66E comes with a one-year limited warranty.

Included in the box:

1. AP66, AP66D, or AP66E
2. APOUTBR-FM2
3. RJ45 cable gland

Ordering Information:

Access Points:

AP66-US	802.11be WiFi7 2+2+2 AP – Internal Antenna for the US Regulatory domain
AP66D-US	802.11be WiFi7 2+2+2 AP – Dynamic Directional Internal Antenna for the US Regulatory domain
AP66E-US	802.11be WiFi7 2+2+2 AP – External Antenna for the US Regulatory domain
AP66-WW	802.11be WiFi7 2+2+2 AP – Internal Antenna for the WW Regulatory domain
AP66D-WW	802.11be WiFi7 2+2+2 AP – Dynamic Directional Internal Antenna for the WW Regulatory domain
AP66E-WW	802.11be WiFi7 2+2+2 AP – External Antenna for the WW Regulatory domain

Mounting bracket included in the box:

APOUTBR-FM2	Flush mount bracket for AP

Optional accessory bracket:

APOUTBR-ART2	Articulating mount for AP

Power Supply options:

802.3at PoE power

Juniper Networks (C) Copyright 2025-2026. All Rights Reserved

Regulatory Compliance Information:

If you need further assistance with purchasing the power source, please contact Juniper Networks, Inc.

Juniper Networks (C) Copyright 2025-2026. All Rights Reserved

FCC Requirement for Operation in the United States of America:

FCC Part 15.247, 15.407, 15.107, and 15.109

FCC Guideline for Human Exposure

This equipment complies with FCC radiation exposure limits set forth for an uncontrolled environment. This equipment should be installed and operated with minimum distance between the radiator & your body; AP66 – 21cm , AP66D – 46cm, AP66E – 42cm

This device complies with Part 15 of the FCC Rules. Operation is subject to the following two conditions: (1) This device may not cause harmful interference, and (2) this device must accept any interference received, including interference that may cause undesired operation.

This equipment has been tested and found to comply with the limits for a Class B digital device, pursuant to Part 15 of the FCC Rules. These limits are designed to provide reasonable protection against harmful interference in a residential installation. This equipment generates, uses and can radiate radio frequency energy and, if not installed and used in accordance with the instructions, may cause harmful interference to radio communications. However, there is no guarantee that interference will not occur in a particular installation. If this equipment does cause harmful interference to radio or television reception, which can be determined by turning the equipment off and on, the user is encouraged to try to correct the interference by one of the following measures:

- Reorient or relocate the receiving antenna.
- Increase the separation between the equipment and receiver.
- Connect the equipment into an outlet on a circuit different from that to which the receiver is connected.
- Consult the dealer or an experienced radio/TV technician for help.

FCC Caution

- Any changes or modifications not expressly approved by the party responsible for compliance could void the user's authority to operate this equipment.
- This transmitter must not be co-located or operating in conjunction with any other antenna or transmitter.
- The 5.925 ~ 7.125GHz operation of this device is prohibited on oil platforms, cars, trains, boats, and aircraft.
- Operation of transmitters in the 5.925-7.125 GHz band is prohibited for control of or communications with unmanned aircraft systems.
- The antenna must be installed completely perpendicular to the horizon.

Juniper Networks (C) Copyright 2025-2026. All Rights Reserved

Industry Canada

This device contains license-exempt transmitter(s)/receiver(s) that comply with Innovation, Science and Economic Development Canada's license-exempt RSS(s). Operation is subject to the following two conditions: (1) This device may not cause harmful interference, and (2) this device must accept any interference received, including interference that may cause undesired operation.

Cet appareil contient des émetteurs / récepteurs exempts de licence qui sont conformes au (x) RSS (s) exemptés de licence d'Innovation, Sciences et Développement économique Canada. L'opération est soumise aux deux conditions suivantes: (1) le dispositif ne doit pas produire de brouillage préjudiciable, et (2) ce dispositif doit accepter tout brouillage reçu, y compris un brouillage susceptible de provoquer un fonctionnement indésirable.

IC Caution

(i) The maximum antenna gain permitted for devices in the bands 5250-5350 MHz and 5470-5725 MHz shall be such that the equipment still complies with the e.i.r.p. limit;
(ii) The maximum antenna gain permitted for devices in the band 5725-5850 MHz shall be such that the equipment still complies with the e.i.r.p. limits specified for point-to-point and non-point-to-point operation as appropriate; and
(iii) Operation on oil platforms, cars, trains, boats and aircraft shall be prohibited except for on large aircraft flying above 10,000 ft.
(iv) Devices shall not be used for control of or communications with unmanned aircraft systems.
(v) The device for operation in the band 5150-5250 MHz is only for indoor use to reduce the potential for harmful interference to co-channel mobile satellite systems.
(vi) The transmitter module may not be co-located with any other transmitter or antenna.

Avertissement

(i) le gain maximal d'antenne permis pour les dispositifs utilisant les bandes de 5250 à 5 350 MHz et de 5470 à 5725 MHz doit être conforme à la limite de la p.i.r.e;
(ii) le gain maximal d'antenne permis (pour les dispositifs utilisant la bande de 5 725 à 5 850 MHz) doit être conforme à la limite de la p.i.r.e. spécifiée pour l'exploitation point à point et l'exploitation non point à point, selon le cas;
(iii) Utilisation interdite à bord de plateformes de forage pétrolier, de voitures, de trains, de bateaux et d'aéronefs, sauf à bord d'un gros aéronef volant à plus de 10 000 pieds d'altitude.
(iv) Les dispositifs ne doivent pas être utilisés pour commander des systèmes d'aéronef sans pilote ni pour communiquer avec de tels systèmes.

Juniper Networks (C) Copyright 2025-2026. All Rights Reserved

(v) Les dispositifs fonctionnant dans la bande 5150-5250 MHz sont réservés uniquement pour une utilisation à l'intérieur afin de réduire les risques de brouillage préjudiciable aux systèmes de satellites mobiles utilisant les mêmes canaux.
(vi) Le module émetteur peut ne pas être coïmplanté avec un autre émetteur ou antenne.

Radiation Exposure Statement:

This equipment complies with IC RSS-102 radiation exposure limits set forth for an uncontrolled environment. This equipment should be installed and operated with minimum distance 21cm (AP66), 27cm (AP66D), 24cm(AP66E) between the radiator & your body.

Cet équipement est conforme aux limites d'exposition aux rayonnements IC établies pour un environnement non contrôlé. Cet équipement doit être installé et utilisé avec un minimum de 21cm (AP66), 27cm (AP66D), 24cm(AP66E) de distance entre la source de rayonnement et votre corps.

Juniper Networks (C) Copyright 2025-2026. All Rights Reserved

CE

Hereby, Juniper Networks, Inc. declares that the radio equipment type (AP66, AP66D, AP66E) is in compliance with Directive 2014/53/EU.
The full text of the EU declaration of conformity is available at the following: https://www.mist.com/support/

The frequency and maximum transmitted Power in EU:

Evaluation Mode	Frequency range (MHz)	Maximum EIRP in EU (dBm)
2.4GHz WLAN	2400 – 2483.5	20
5GHz WLAN B1	5150 – 5250	23
5GHz WLAN B2	5250 – 5350	23
5GHz WLAN B3	5470 – 5725	30
5GHz WLAN B4 (EN 300 440 V2.2.1)	5725 – 5825	13.98
6GHz WLAN (EN 303 687)	5945 – 6425	23
Bluetooth	2400 – 2483.5	20
IEEE 802.15.4 (Zigbee)	2400 – 2483.5	20

This equipment complies with EU radiation exposure limits set forth for an uncontrolled environment. This equipment should be installed and operated with minimum distance 20cm between the radiator & your body.

The product is for use by authorized professionals and in environments where the product has been assessed for safe and compliant operation. The installer is responsible for ensuring that the equipment meets all local safety requirements for the installed location.
For products not certified for use in Hazardous Locations, the equipment is not suitable for use in explosive environments, in the presence of flammable liquids, near explosives, or in areas where blasting is occurring.

The device is restricted to indoor use only when operating in 5150 to 5350 MHz and 5945 to 6425MHz frequency ranges.

	AT	BE	BG	CZ	DK	EE	FR	DE	IS
	IE	IT	EL	ES	CY	LV	LI	LT	LU
	HU	MT	NL	NO	PL	PT	RO	SI	SK
	TR	FI	SE	CH	HR	UK(NI)			

Juniper Networks (C) Copyright 2025-2026. All Rights Reserved

UK

Hereby, Juniper Networks, Inc. declares that the radio equipment type (AP66, AP66D, AP66E) is in compliance with Radio Equipment Regulations 2017.
The full text of the UK declaration of conformity is available at the following:
https://www.mist.com/support/

The frequency and maximum transmitted Power in UK:

Evaluation Mode	Frequency range (MHz)	Maximum EIRP in EU (dBm)
2.4GHz WLAN	2400 – 2483.5	20
5GHz WLAN B1	5150 – 5250	23
5GHz WLAN B2	5250 – 5350	23
5GHz WLAN B3	5470 – 5725	30
5GHz WLAN B4	5725 – 5825	23
6GHz WLAN	5945 – 6425	23
Bluetooth	2400 – 2483.5	20
IEEE 802.15.4 (Zigbee)	2400 – 2483.5	20

This equipment complies with UK radiation exposure limits set forth for an uncontrolled environment. This equipment should be installed and operated with minimum distance 20cm between the radiator & your body.

The product is for use by authorized professionals and in environments where the product has been assessed for safe and compliant operation. The installer is responsible for ensuring that the equipment meets all local safety requirements for the installed location.
For products not certified for use in Hazardous Locations, the equipment is not suitable for use in explosive environments, in the presence of flammable liquids, near explosives, or in areas where blasting is occurring.

The device is restricted to indoor use only when operating in 5150 to 5350 MHz and 5945 to 6425MHz frequency ranges.

	UK(NI)

Juniper Networks (C) Copyright 2025-2026. All Rights Reserved

Taiwan

取得審驗證明之低功率射頻器材，非經核准，公司、商號或使用者均不得擅自變更頻率、加大功率或變更原設計之特性及功能。低功率射頻器材之使用不得影響飛航安全及干擾合法通信；經發現有干擾現象時，應立即停用，並改善至無干擾時方得繼續使用。前述合法通信，指依電信管理法規定作業之無線電通信。低功率射頻器材須忍受合法通信或工業、科學及醫療用電波輻射性電機設備之干擾。
應避免影響附近雷達系統之操作。

Brazil

Este equipamento não tem direito a proteção contra interferência prejudicial e não pode causar interferência em sistemas devidamente autorizados. Este produto não é apropriado para uso em ambientes domésticos, pois poderá causar interferencias eletromagnéticas que obrigam o usuário a tomar medidas necessárias para minimizar essas interferências.

Paraguay

En Paraguay, este equipo deberá ser configurado para operar con las limitaciones establecidas en la Norma Técnica NTC-RF-5925:2025 de la CONATEL.

Morocco

AGREE PAR L'ANRT MAROC

AP66 -
Numéro d'agrément: MR 00650 ANRT 2026
Date d'agrément: 05/02/2026

AP66D -
Numéro d'agrément: MR 00651 ANRT 2026
Date d'agrément: 05/02/2026

Juniper Networks (C) Copyright 2025-2026. All Rights Reserved