AP24 Hardware Installation Guide

Overview

The AP24 contains three IEEE 802.11ax radios that deliver 2x2 MIMO with two spatial streams when operating in multi-user (MU) or single-user (SU) mode. The AP24 can operate simultaneously in the 6GHz band, 5GHz band, and 2.4GHz band or two bands and a dedicated tri-band scan radio.

Juniper Networks (C) Copyright 2022-2023. All Rights Reserved

I/O ports

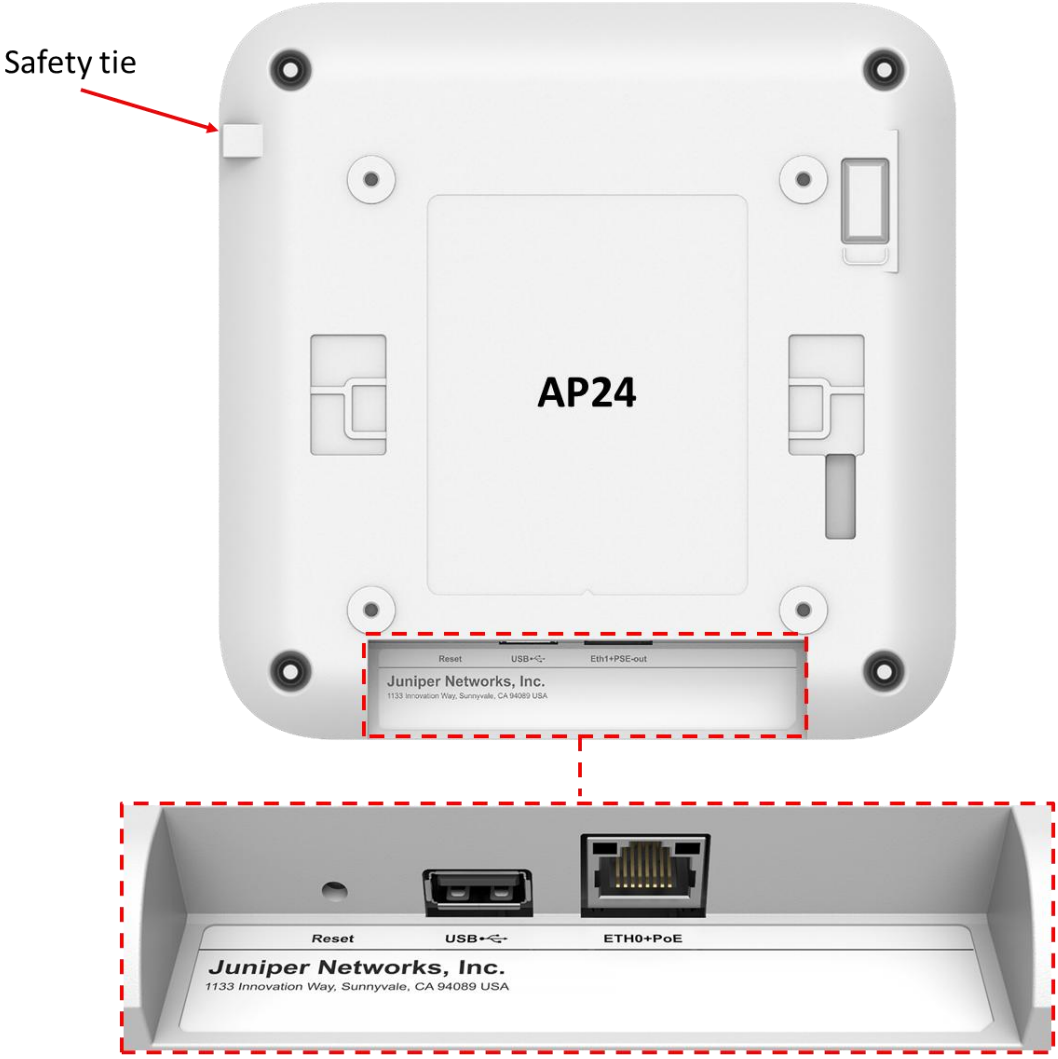

Reset	Reset to the factory default settings
USB	USB2.0 support interface
Eth0+PoE	100/1000/2500BASE-T RJ45 interface that supports 802.3at/802.3bt PoE PD

Juniper Networks (C) Copyright 2022-2023. All Rights Reserved

AP24 Mounting

APBR-U Mounting box options

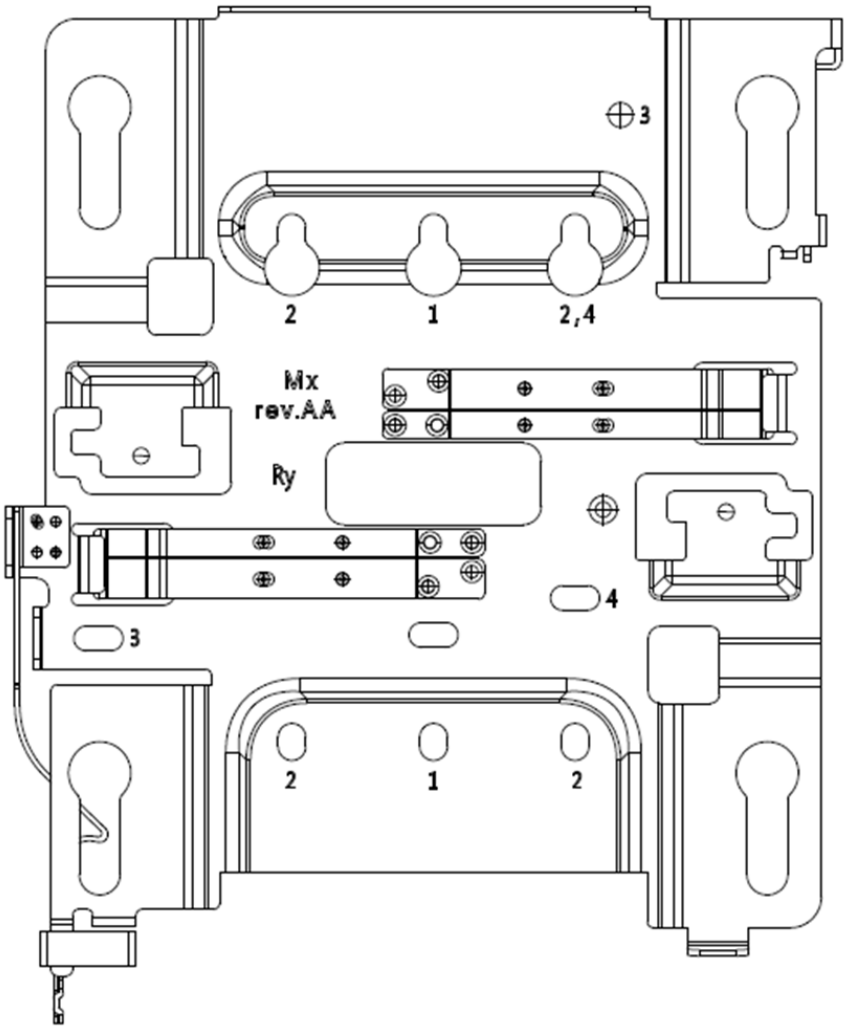

Holes	Mounting options
1	US Single gang, 4 inch round, 3.5 inch round
2	US Double gang, Wall/ceiling mount
3	US 4 inch square
4	EU junction box

In a wall mount installation, please use screws that have a 1/4in. (6.3mm) diameter head with a length at least 2 in. (50.8mm).

APBR-U that is in the AP24 box includes a set screw and an eyehook.

Juniper Networks (C) Copyright 2022-2023. All Rights Reserved

Mounting to a 9/16 inch or 15/16 inch T-bar

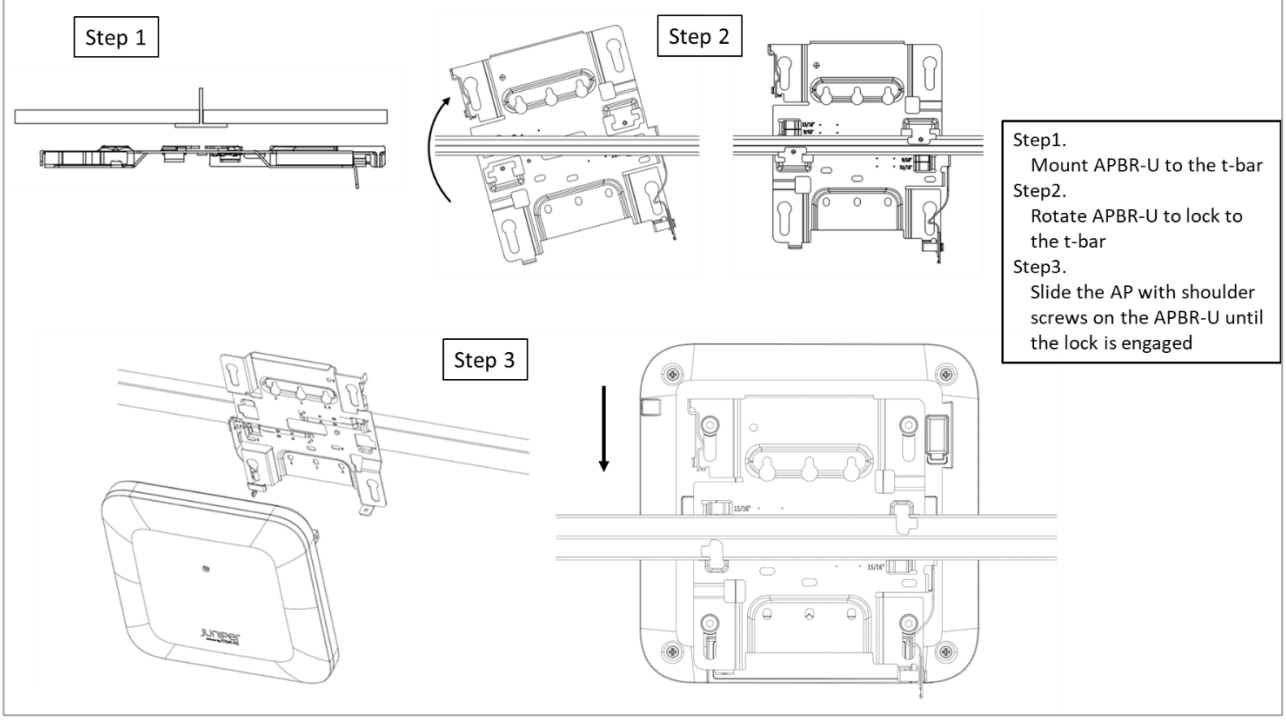

US single gang, 3.5 or 4 inch round junction box

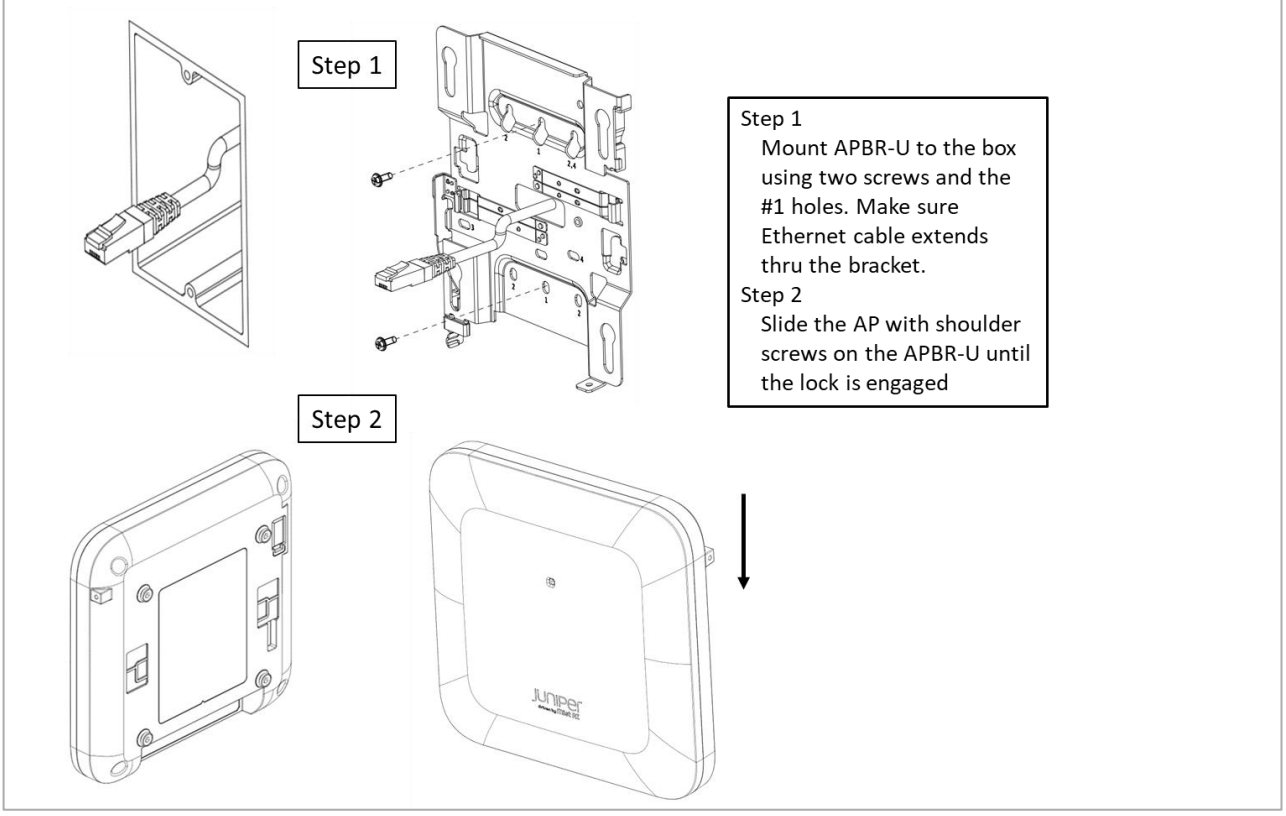

Juniper Networks (C) Copyright 2022-2023. All Rights Reserved

US double gang junction box

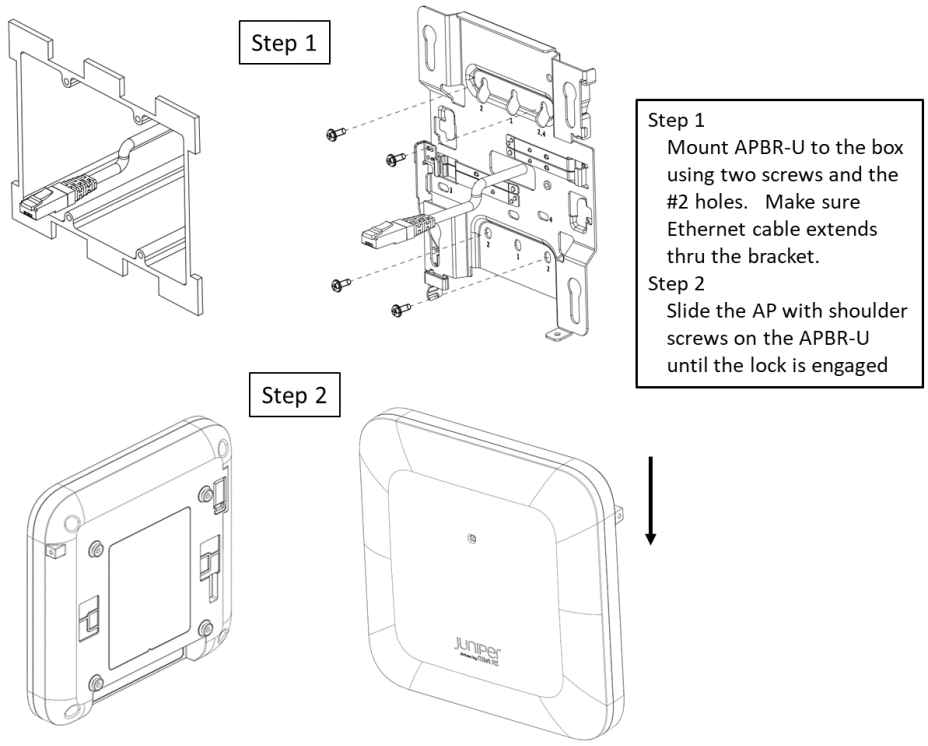

US 4 inch square junction box

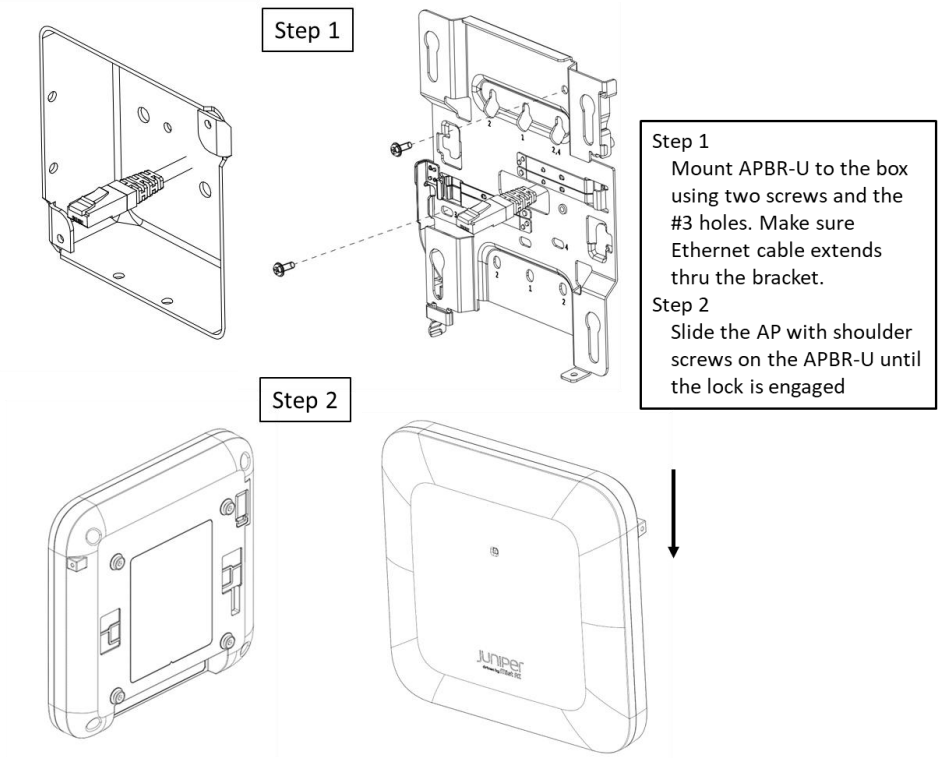

Juniper Networks (C) Copyright 2022-2023. All Rights Reserved

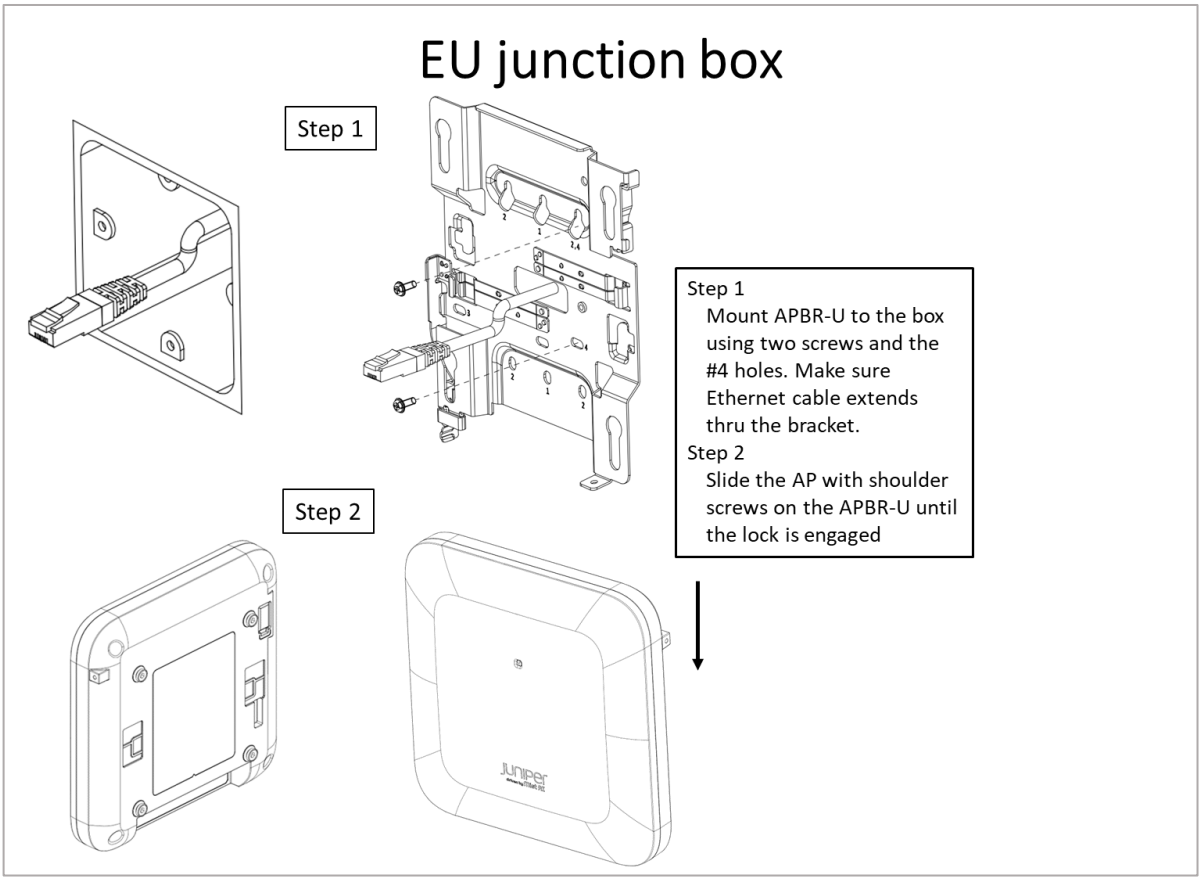

Juniper Networks (C) Copyright 2022-2023. All Rights Reserved

Recessed 15/16 inch T-bar

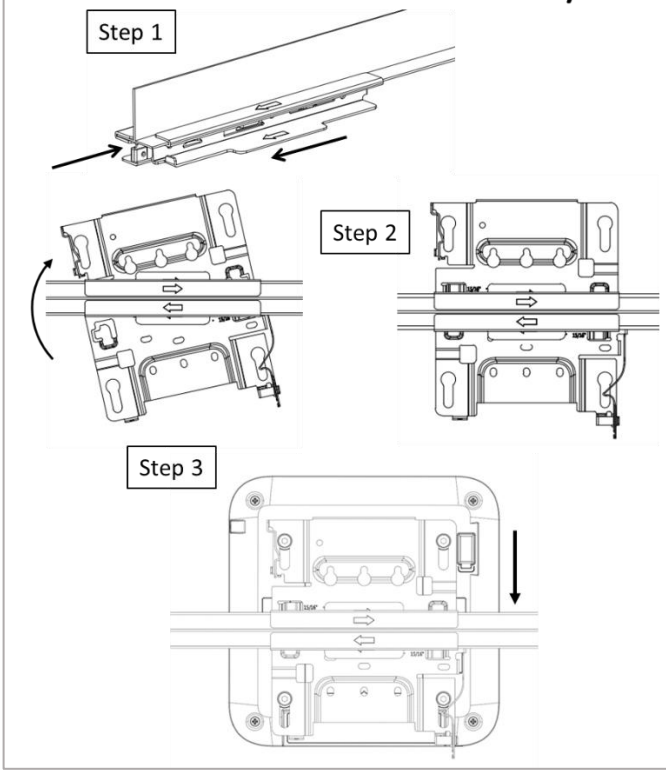

Step 1
Mount the APBR-ADP-RT15 to the t-bar
Step 2
Mount the APBR-U to the APBR-ADP-RT15. Rotate the APBR-U to lock to the APBR-ADP-RT15
Step 3
Slide the AP with shoulder screws on the APBR-U until the lock is engaged

Recessed 9/16 inch T-bar or channel rail

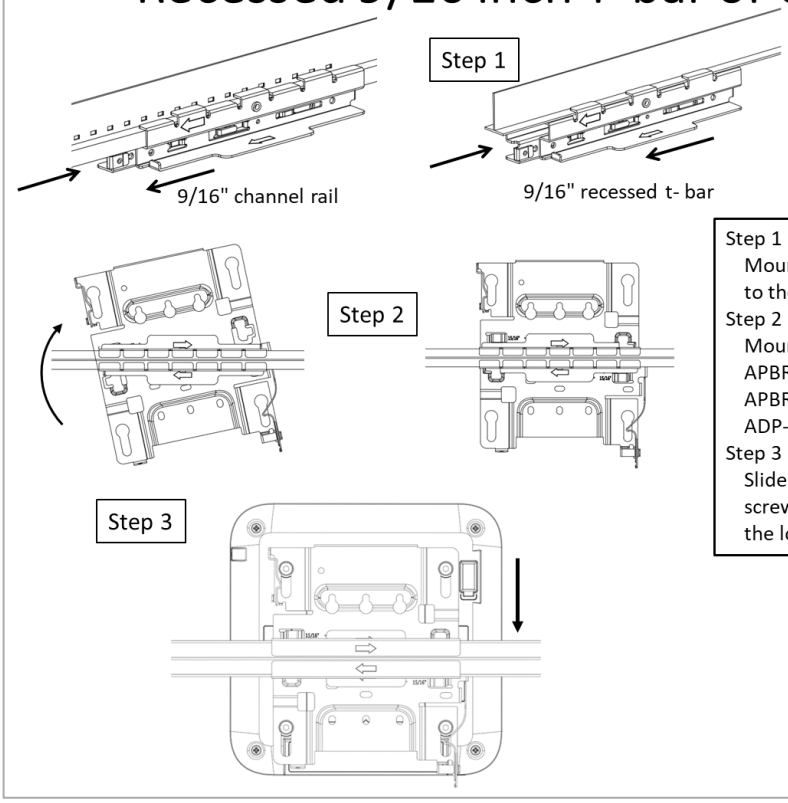

Step 1
Mount the APBR-ADP-CR9 to the t-bar
Step 2
Mount the APBR-U to the APBR-ADP-CR9. Rotate the APBR-U to lock to the APBR-ADP-CR9
Step 3
Slide the AP with shoulder screws on the APBR-U until the lock is engaged

Juniper Networks (C) Copyright 2022-2023. All Rights Reserved

1.5 inch T-bar

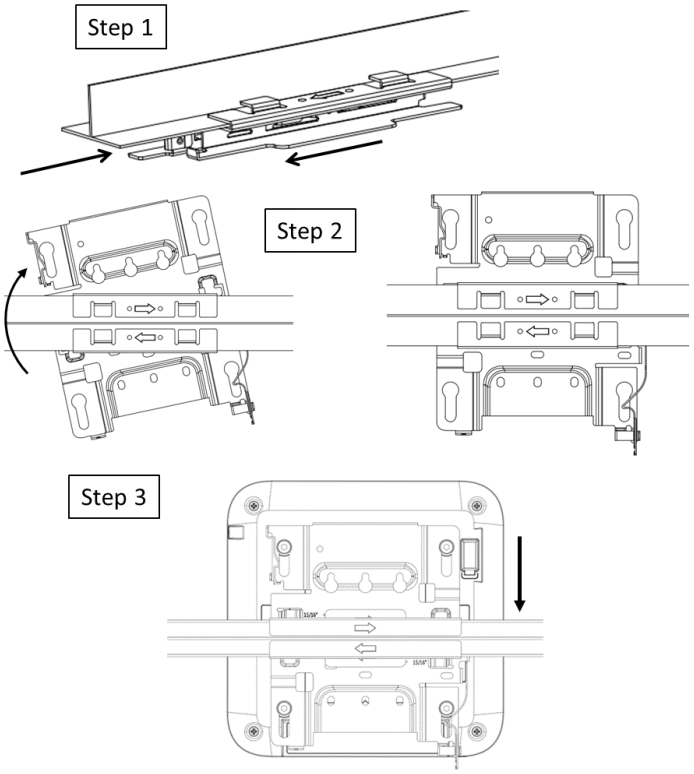

Step 1
Mount the APBR-ADP-WS15 to the t-bar
Step 2
Mount the APBR-U to the APBR-ADP-WS15. Rotate the APBR-U to lock to the APBR-ADP-WS15
Step 3
Slide the AP with shoulder screws on the APBR-U until the lock is engaged

Threaded rod adapter (1/2”, 5/8”, or M16)

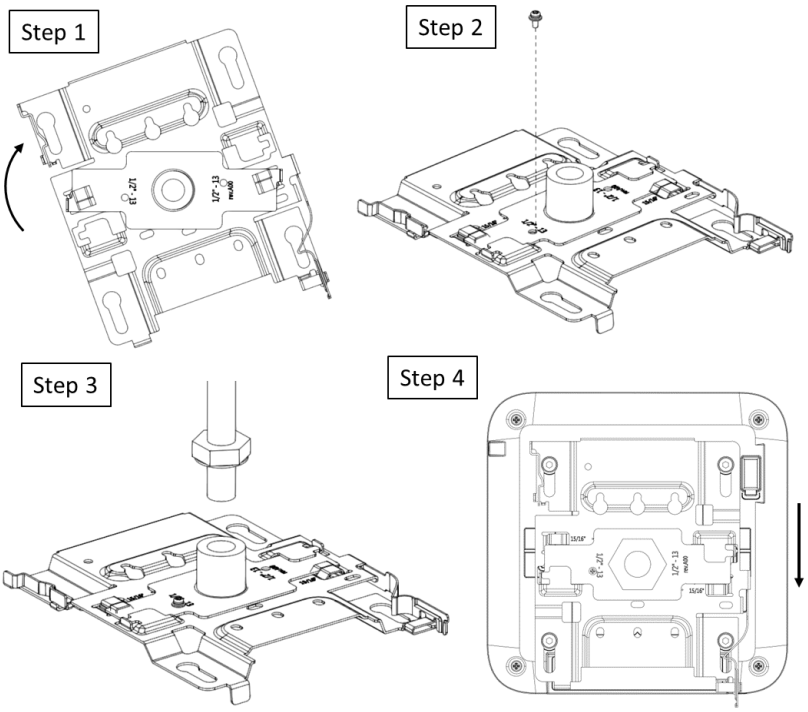

Step 1
Install the APBR-ADP-T12 to the APBR-U. Rotate to lock.
Step 2
Secure the APBR-ADP-T12 to the APBR-U with the provided screw
Step 3
Install the bracket assembly to the 1/2” threaded rod and secure with the provided lock washer and nut.
Step 4
Slide the AP with shoulder screws on the APBR-U until the lock is engaged

The same instructions work for the APBR-ADP-T58 or APBR-ADP-M16

The threaded rod adapter attaches to a rod that is either 1/2"-13, 5/8”-11, or M16-2.

Juniper Networks (C) Copyright 2022-2023. All Rights Reserved

Technical Specifications:

Feature	Description
Power options	802.3at/802.3bt PoE
Dimensions	185mm x 185mm x 39mm (7.28in x 7.28in x 1.54in)
Weight	AP24: 0.75 kg (1.65 lbs)
Operating temperature	AP24: 0° to 40° C
Operating humidity	10% to 90% maximum relative humidity, non-condensing
Operating altitude	3,048m (10,000 ft)
Electromagnetic emissions	FCC Part 15 Class B
I/O	1 – 100/1000/2500BASE-T auto-sensing RJ-45 with PoE USB2.0
RF	2.4GHz or 6GHz - 2x2:2SS 802.11ax MU-MIMO & SU-MIMO 5GHz - 2x2:2SS 802.11ax MU-MIMO & SU-MIMO 1x1: 1SS 802.11ax 2.4GHz/5GHz/6GHz scan 2.4GHz BLE with Omni Antenna
Maximum PHY rate	Total maximum PHY rate – 3600 Mbps 6GHz – 2400 Mbps 5GHz – 1200 Mbps 2.4GHz – 600 Mbps
Indicators	Multi-color status LED
Safety standards	CSA 62368-1 CAN/CSA-C22.2 No. 62368-1-19 UL 2043 ICES-003:2020 Issue 7, Class B (Canada)

Suitable for use in environmental air space in accordance with Section 300-22(C) of the National Electrical Code, and Sections 2-128, 12-010(3), and 12-100 of the Canadian Electrical Code, Part 1, CSA C22.1.

Juniper Networks (C) Copyright 2022-2023. All Rights Reserved

Warranty Information

The AP24 family of Access Points comes with a limited lifetime warranty.

Included in the box:

1. AP24
2. APBR-U

Ordering Information:

Access Points

AP24-US	802.11ax 6E 2+2+2 – Internal Antenna for the US Regulatory domain
AP24-WW	802.11ax 6E 2+2+2 – Internal Antenna for the WW Regulatory domain

Mounting brackets

APBR-U	Universal AP Bracket for T-Rail and Drywall mounting for Indoor Access Points
APBR-ADP-T58	Adapter for 5/8-inch threaded rod bracket
APBR-ADP-M16	Adapter for 16mm threaded rod bracket
APBR-ADP-T12	Adapter for 1/2-inch threaded rod bracket
APBR-ADP-CR9	Adapter for channel rail and recessed 9/16” t-rail
APBR-ADP-RT15	Adapter for recessed 15/16" t-rail
APBR-ADP-WS15	Adapter for recessed 1.5" t-rail

Power Supply options

802.3at or 802.3bt PoE power

Juniper Networks (C) Copyright 2022-2023. All Rights Reserved

Regulatory Compliance Information:

This product and all interconnected equipment must be installed indoors within the same building, including the associated LAN connections as defined by the 802.3at Standard.

Operations in the 5.15GHz – 5.35GHz band are restricted to indoor usage only.

If you need further assistance with purchasing the power source, please contact Juniper Networks, Inc.

Juniper Networks (C) Copyright 2022-2023. All Rights Reserved

FCC Requirement for Operation in the United States of America:

FCC Part 15.247, 15.407, 15.107, and 15.109

FCC Guideline for Human Exposure

This equipment complies with FCC radiation exposure limits set forth for an uncontrolled environment. This equipment should be installed and operated with minimum distance between the radiator & your body; AP24 – 26cm

This device complies with Part 15 of the FCC Rules. Operation is subject to the following two conditions: (1) This device may not cause harmful interference, and (2) this device must accept any interference received, including interference that may cause undesired operation.

This equipment has been tested and found to comply with the limits for a Class B digital device, pursuant to Part 15 of the FCC Rules. These limits are designed to provide reasonable protection against harmful interference in a residential installation. This equipment generates, uses and can radiate radio frequency energy and, if not installed and used in accordance with the instructions, may cause harmful interference to radio communications. However, there is no guarantee that interference will not occur in a particular installation. If this equipment does cause harmful interference to radio or television reception, which can be determined by turning the equipment off and on, the user is encouraged to try to correct the interference by one of the following measures:

- Reorient or relocate the receiving antenna.
- Increase the separation between the equipment and receiver.
- Connect the equipment into an outlet on a circuit different from that to which the receiver is connected.
- Consult the dealer or an experienced radio/TV technician for help.

FCC Caution

- Any changes or modifications not expressly approved by the party responsible for compliance could void the user's authority to operate this equipment.
- This transmitter must not be co-located or operating in conjunction with any other antenna or transmitter.
- This device is restricted for indoor use.
- For the low-power indoor access point, the 5.925 ~ 7.125GHz operation of this device is prohibited on oil platforms, cars, trains, boats, and aircraft, except that operation of this device is permitted in large aircraft while flying above 10,000 feet.

Juniper Networks (C) Copyright 2022-2023. All Rights Reserved

- Operation of transmitters in the 5.925-7.125 GHz band is prohibited for control of or Communications with unmanned aircraft systems.

Juniper Networks (C) Copyright 2022-2023. All Rights Reserved

Industry Canada

This device contains license-exempt transmitter(s)/receiver(s) that comply with Innovation, Science and Economic Development Canada's license-exempt RSS(s). Operation is subject to the following two conditions: (1) This device may not cause harmful interference, and (2) this device must accept any interference received, including interference that may cause undesired operation.

Cet appareil contient des émetteurs / récepteurs exempts de licence qui sont conformes au (x) RSS (s) exemptés de licence d'Innovation, Sciences et Développement économique Canada. L'opération est soumise aux deux conditions suivantes: (1) le dispositif ne doit pas produire de brouillage préjudiciable, et (2) ce dispositif doit accepter tout brouillage reçu, y compris un brouillage susceptible de provoquer un fonctionnement indésirable.

The antenna height shall be determined by the installer or operator of the standard-power access point or fixed client device, or by automatic means. This information shall be stored internally in the device. Provision of accurate device information is mandatory.

La hauteur de l'antenne doit être déterminée par l'installateur ou l'opérateur du point d'accès à puissance standard ou de l'appareil client fixe, ou par des moyens automatiques. Ces informations doivent être stockées en interne dans l'appareil. La fourniture d'informations précises sur l'appareil est obligatoire.

IC Caution

(i) The device for operation in the band 5150-5250 MHz is only for indoor use to reduce the potential for harmful interference to co-channel mobile satellite systems;
(ii) The maximum antenna gain permitted for devices in the bands 5250-5350 MHz and 5470-5725 MHz shall be such that the equipment still complies with the e.i.r.p. limit;
(iii) The maximum antenna gain permitted for devices in the band 5725-5850 MHz shall be such that the equipment still complies with the e.i.r.p. limits specified for point-to-point and non-point-to-point operation as appropriate; and
(iv) Operation shall be limited to indoor use only.
(v) Devices shall not be used for control of or communications with unmanned aircraft systems.
(vi) Devices shall not be used on oil platforms.
(vii) Devices shall not be used on aircraft, except for the low-power indoor access points, indoor subordinate devices, low-power client devices, and very low-power devices operating in the 5925-6425 MHz band, that may be used on large aircraft as defined in the Canadian Aviation Regulations, while flying above 3,048 metres (10,000 feet).
(viii) Devices shall not be used on automobiles.
(ix) Devices shall not be used on trains.
(x) Devices shall not be used on maritime vessels.

Juniper Networks (C) Copyright 2022-2023. All Rights Reserved

Avertissement

(i) les dispositifs fonctionnant dans la bande 5150-5250 MHz sont réservés uniquement pour une utilisation à l'intérieur afin de réduire les risques de brouillage préjudiciable aux systèmes de satellites mobiles utilisant les mêmes canaux;

(ii) le gain maximal d'antenne permis pour les dispositifs utilisant les bandes de 5250 à 5 350 MHz et de 5470 à 5725 MHz doit être conforme à la limite de la p.i.r.e;

(iii) le gain maximal d'antenne permis (pour les dispositifs utilisant la bande de 5 725 à 5 850 MHz) doit être conforme à la limite de la p.i.r.e. spécifiée pour l'exploitation point à point et l'exploitation non point à point, selon le cas;

(iv) Utilisation limitée à l'intérieur seulement.

(v) *Les appareils ne doivent pas être utilisés pour contrôler ou communiquer avec des systèmes d'aéronefs sans pilote.*

(vi) *Les appareils ne doivent pas être utilisés sur les plates-formes pétrolières.*

(vii) *Les appareils ne doivent pas être utilisés sur les avions, à l'exception des points d'accès intérieure à faible puissance, des dispositifs subordonnés intérieurs, des dispositifs clients de faible puissance et des dispositifs de très faible puissance fonctionnant dans la bande 5925-6425 MHz, qui peut être utilisée sur de grands avions tel que défini dans la réglementation de l'aviation canadienne, tout en volant au-dessus de 3 048 mètres (10 000 pieds).*

(viii) *Les appareils ne doivent pas être utilisés sur les automobiles.*

(ix) *Les appareils ne doivent pas être utilisés dans les trains.*

(x) *Les appareils ne doivent pas être utilisés sur les navires maritimes.*

Radiation Exposure Statement:

This equipment complies with IC RSS-102 radiation exposure limits set forth for an uncontrolled environment. This equipment should be installed and operated with minimum distance 20cm (AP24) between the radiator & your body.

Cet équipement est conforme aux limites d'exposition aux rayonnements IC établies pour un environnement non contrôlé. Cet équipement doit être installé et utilisé avec un minimum de 20cm (AP24) de distance entre la source de rayonnement et votre corps.

Juniper Networks (C) Copyright 2022-2023. All Rights Reserved

CE

Hereby, Juniper Networks, Inc. declares that the radio equipment type (AP24) is in compliance with Directive 2014/53/EU.
The full text of the EU declaration of conformity is available at the following:
https://www.mist.com/support/

The frequency and maximum transmitted Power in EU:

Bluetooth/Thread/Zigbee:

Frequency range (MHz)	Maximum EIRP in EU (dBm)
2400 – 2483.5	9.98

WLAN:

Frequency range (MHz)	Maximum EIRP in EU (dBm)
2400 – 2483.5	19.97
5150 – 5250	22.99
5250 – 5350	22.99
5500 – 5700	28.60
5745 – 5825	13.97
5945 – 6425	22.96

This equipment complies with EU radiation exposure limits set forth for an uncontrolled environment. This equipment should be installed and operated with minimum distance 20cm between the radiator & your body.

The product is for use by authorized professionals and in environments where the product has been assessed for safe and compliant operation. The installer is responsible for ensuring that the equipment meets all local safety requirements for the installed location.
For products not certified for use in Hazardous Locations, the equipment is not suitable for use in explosive environments, in the presence of flammable liquids, near explosives, or in areas where blasting is occurring.

The device is restricted to indoor use only when operating in 5150 to 5350 MHz and 5945 to 6425MHz frequency ranges.

	AT	BE	BG	CZ	DK	EE	FR	DE	IS
	IE	IT	EL	ES	CY	LV	LI	LT	LU
	HU	MT	NL	NO	PL	PT	RO	SI	SK
	TR	FI	SE	CH	HR	UK(NI)			

Juniper Networks (C) Copyright 2022-2023. All Rights Reserved

UK

Hereby, Juniper Networks, Inc. declares that the radio equipment type (AP24) is in compliance with Radio Equipment Regulations 2017.
The full text of the UK declaration of conformity is available at the following:
https://www.mist.com/support/

The frequency and maximum transmitted Power in UK:

Bluetooth:

Frequency range (MHz)	Maximum EIRP in UK (dBm)
2400 – 2483.5	9.98

WLAN:

Frequency range (MHz)	Maximum EIRP in UK (dBm)
2400 – 2483.5	19.97
5150 – 5250	22.99
5250 – 5350	22.99
5500 – 5700	28.58
5745 – 5825	22.94
5925 – 6425	22.96

This equipment complies with UK radiation exposure limits set forth for an uncontrolled environment. This equipment should be installed and operated with minimum distance 20cm between the radiator & your body.

The product is for use by authorized professionals and in environments where the product has been assessed for safe and compliant operation. The installer is responsible for ensuring that the equipment meets all local safety requirements for the installed location.
For products not certified for use in Hazardous Locations, the equipment is not suitable for use in explosive environments, in the presence of flammable liquids, near explosives, or in areas where blasting is occurring.

The device is restricted to indoor use only when operating in 5150 to 5350 MHz and 5925 to 6425MHz frequency ranges.

	UK(NI)

Juniper Networks (C) Copyright 2022-2023. All Rights Reserved

Japan

AP24 Access Point is restricted to indoor use only when operating in 5150-5350MHz and 5925 to 6425MHz frequency ranges.

この装置は、クラスB機器です。この装置は、住宅環境で使用することを目的としていますが、この装置がラジオやテレビジョン受信機に近接して使用されると、受信障害を引き起こすことがあります。
取扱説明書に従って正しい取り扱いをして下さい。 VCCI-B

Morocco

AGREE PAR L'ANRT MAROC
AP24 -
Numéro d'agrément: MR 39148 ANRT 2023
Date d'agrément: 12/07/2023

Thailand

- เครื่องโทรคมนาคมและอุปกรณ์นี้มีความสอดคล้องตามมาตรฐานหรือข้อกำหนดทางเทคนิคของ กสทช.

กสทช.

เครื่องวิทยุคมนาคมนี้ ได้รับยกเว้น ไม่ต้องได้รับใบอนุญาตให้มี ใช้ซึ่งเครื่องวิทยุคมนาคม หรือตั้งสถานีวิทยุคมนาคมตามประกาศ กสทช. เรื่อง เครื่องวิทยุคมนาคม และสถานีวิทยุคมนาคมที่ได้รับยกเว้นไม่ต้องได้รับใบอนุญาตวิทยุคมนาคม ตามพระราชบัญญัติวิทยุคมนาคม พ.ศ. 2498

กสทช. | โทรคมนาคม
กำกับดูแลเพื่อประชาชน
Call Center 1200 (โทรฟรี)

Taiwan

取得審驗證明之低功率射頻器材，非經核准，公司、商號或使 用者均不得擅自變更頻率、加大功率或變更原設計之特性及功能。低功率射 頻器材之使用不得影響飛航安全及干擾合法通信；經發現有干擾現象時，應 立即停用，並改善至無干擾時方得繼續使用。前述合法通信，指依電信管理 法規定作業之無線電通信。低功率射頻器材須忍受合法通信或工業、科學及 醫療用電波輻射性電機設備之干擾。無線資訊傳輸設備避免影響附近雷達系統之操作。

Juniper Networks (C) Copyright 2022-2023. All Rights Reserved

Brazil

- Este equipamento não tem direito a proteção contra interferência prejudicial e não pode causar interferência em sistemas devidamente autorizados.
- Este produto não é apropriado para uso em ambientes domésticos, pois poderá causar interferências eletromagnéticas que obrigam o usuário a tomar medidas necessárias para minimizar estas interferências

Paraguay

En Paraguay, este equipo deberá ser configurado para operar con las limitaciones establecidas en la Norma Técnica NTC-RF-5925:2025 de la CONATEL

Juniper Networks (C) Copyright 2022-2023. All Rights Reserved